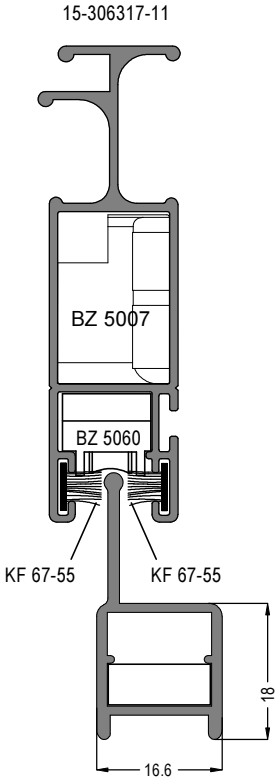

15-07002

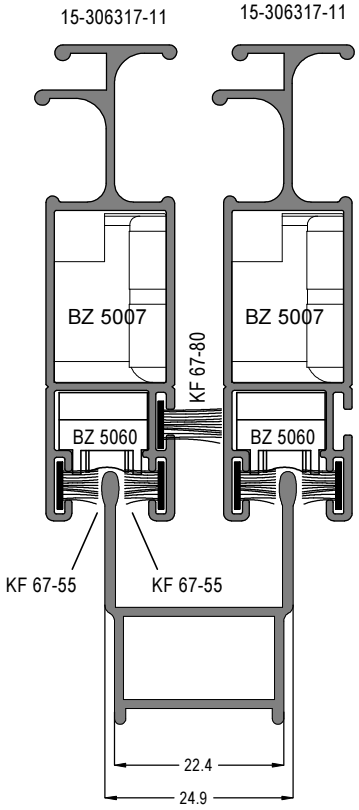

15-07003